DRAWING NUMBER
02-556-376
NPI OR ECN NO
ECN000574

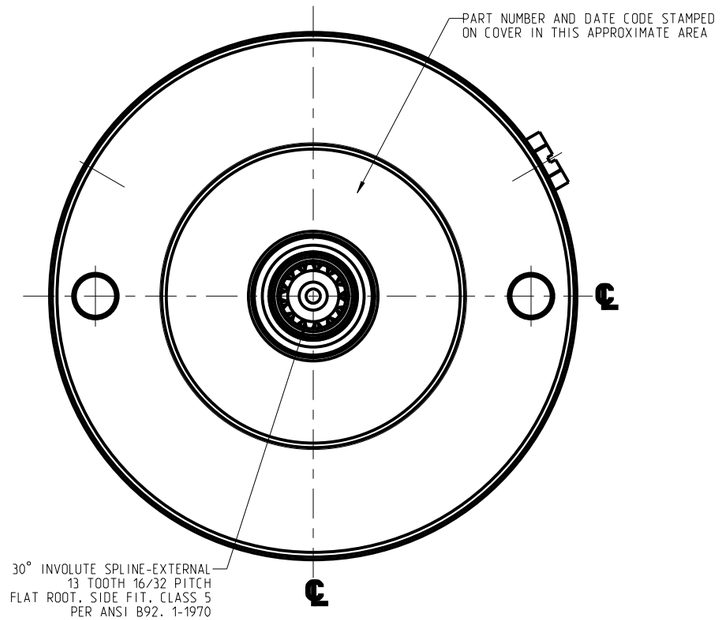

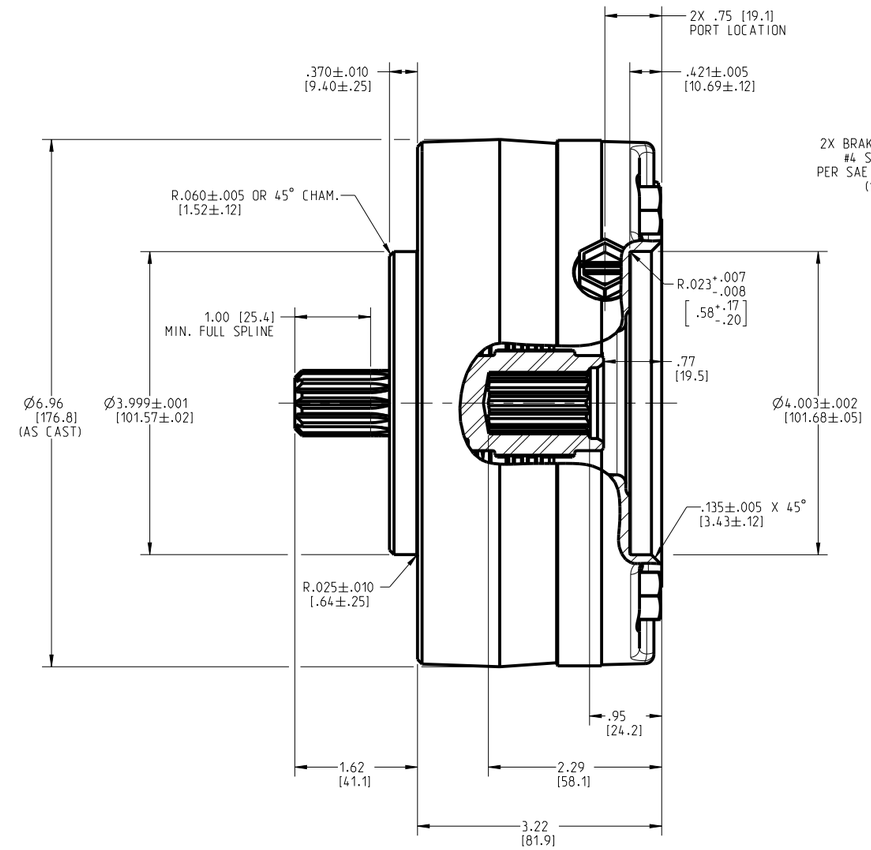

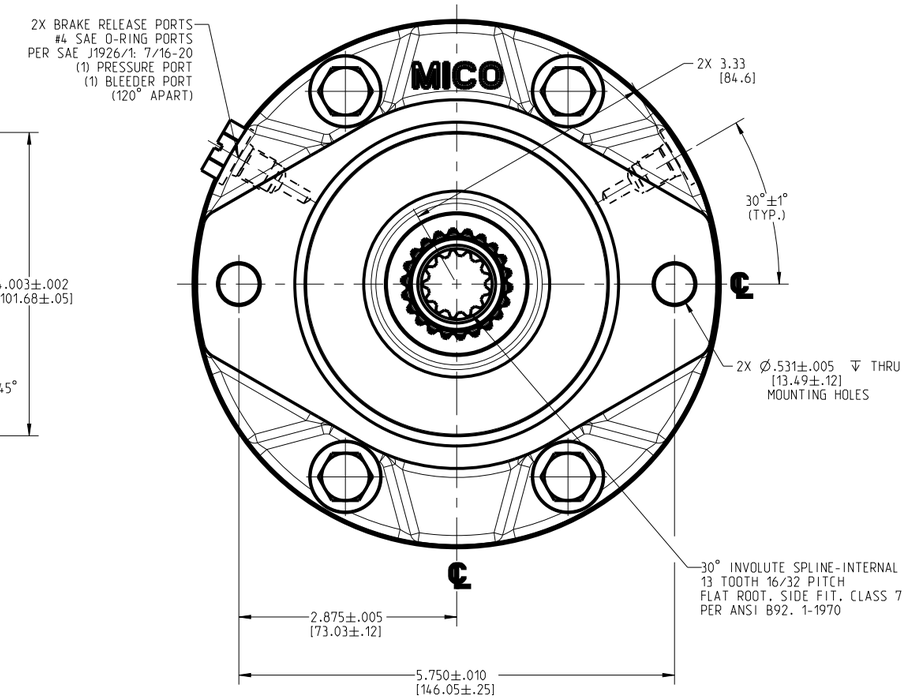

NOTES:

1. FOR USE WITH MINERAL BASE HYDRAULIC OIL ONLY
2. DIMENSIONS MAY VARY BETWEEN UNITS AND ARE FOR REFERENCE PURPOSES ONLY
   MILLIMETER VALUES MAY NOT BE AN EXACT CONVERSION OF INCH VALUES
3. LINING REPAIR KIT P/N 20-060-107
4. BEARING REPAIR KIT P/N 02-500-142
5. O-RING REPAIR KIT P/N 02-500-141
6. SPRING REPAIR KIT P/N 12-501-515

SPECIFICATIONS:

TYPE:	DRY MULTIPLE DISC BRAKE. SPRING APPLY. HYDRAULIC RELEASE
MAXIMUM SPEED:	4,000 RPM SHAFT SPEED CAPABILITY SPECIFIED IS FOR BRAKE IN RELEASED CONDITION. ENERGY ABSORPTION DURING APPLY CYCLE MUST BE CAREFULLY EXAMINED FOR EACH APPLICATION.
TORQUE RATING:	4,000 LBIN STATIC (BREAKAWAY) ACTUAL TORQUE MAY VARY BY UP TO 10% DUE TO MANUFACTURING TOLERANCES.
RELEASE PRESSURE:	220 PSI INITIAL, 260 PSI FULL & 3,000 PSI MAX.
LINING MATERIAL:	SINTERED BRONZE
VOLUME OF OIL REQUIRED: TO RELEASE BRAKE	0.5 IN^3 MIN., 0.9 IN^3 MAX.
APPROXIMATE WEIGHT:	23 LB

INCH
[MILLIMETER]

COMPONENT AND SYSTEM RECOMMENDATIONS MADE BY MICO, INC ARE BASED ON INFORMATION SUPPLIED BY POTENTIAL USER AND/OR SYSTEM DESIGNER. THE POTENTIAL USER AND/OR DESIGNER MUST MAKE FINAL ACCEPTANCE AND APPROVAL OF COMPONENTS AND SYSTEM AFTER TESTING PERFORMANCE ON AN ACTUAL APPLICATION FOR WHICH SYSTEM WAS DESIGNED.

MICO, INC CLAIMS PROPRIETARY RIGHTS TO THE MATERIAL DISCLOSED IN THIS DOCUMENT. THIS DOCUMENT IS PROVIDED IN CONFIDENCE AND MAY NOT BE REPRODUCED OR DISCLOSED WITHOUT WRITTEN PERMISSION FROM MICO, INC. COPYRIGHT MICO, INC. ALL RIGHTS RESERVED.

MICO®
North Mankato, Minnesota USA

SCALE	TITLE LMB-131340-B MULTIPLE DISC BRAKE			
0.500				
DWN SHYPO 2014-08-06	APVD PROD ENGRG PJS 2014-12-30	SIZE	DRAWING NUMBER	REV
X NO	APVD ENGRG RV 09-17-2014	B	02-556-376 CUSTOMER COPY	H 1

01-JAN-2012