PRODUCT BULLETIN

Heavy-Duty Ratchet Handle

DESCRIPTION

The ZF Ratchet Handles are a quality built heavy-duty brake levers that can be used in numerous applications. These levers were designed with heavy-duty off-road type applications in mind. They will meet your park brake system requirements as well as any number of other actuation demands.

These ratchet handles can withstand applications in excess of 200 lb (890 N). The components are constructed with stamped steel that is either zinc plated or cathodic electrocoat paint. This type of paint coating offers up to 1000 hours of automotive salt spray resistance.

Typical applications range from being used to apply and release brake or locking cables to controlling remote actuators, switches, or throttle controls. A ratchet handle model is available with an integral SPDT snap action switch. See back page for dimensional information.

Model Number: 32-140-020

Lever Ratio 8.8:1
Lever Cable Travel ..... 31.8 mm (1.25 in)
Lever Angle..... 59°
Approximate Size ..... 40.6 cm x 11.4 cm x 6.4 cm (16 in x 4.5 in x 2.5 in)
Approximate Weight ..... 1.36 kg (3.00 lb)

Model Number: 32-140-021 (with switch)

Lever Ratio 8.9:1
Lever Cable Travel ..... 18.54 mm (0.73 in)
Lever Angle..... 38.5°
Approximate Size ..... 40.6 cm x 11.4 cm x 6.4 cm (16 in x 4.5 in x 2.5 in)
Approximate Weight ..... 1.36 kg (3.00 lb)
SPDT snap action switch.....current rating 5 AMP resistive 3 AMP inductive @ 30 VDC

This publication is not subject to any update service. Information contained in this publication was in eff ect at the time the publication was approved for printing and is subject to change without notice or liability. ZF Off-Highway Solutions Minnesota Inc. reserves the right to revise the information presented or to discontinue the production of parts described at any time.

ZF Off-Highway Solutions Minnesota Inc.
1911 Lee Boulevard / North Mankato, MN U.S.A. 56003
Tel: +1 507 625 6426 **Fax:** +1 507 625 3212
www.mico.com

Form No. 80-950-028 2011-04-19

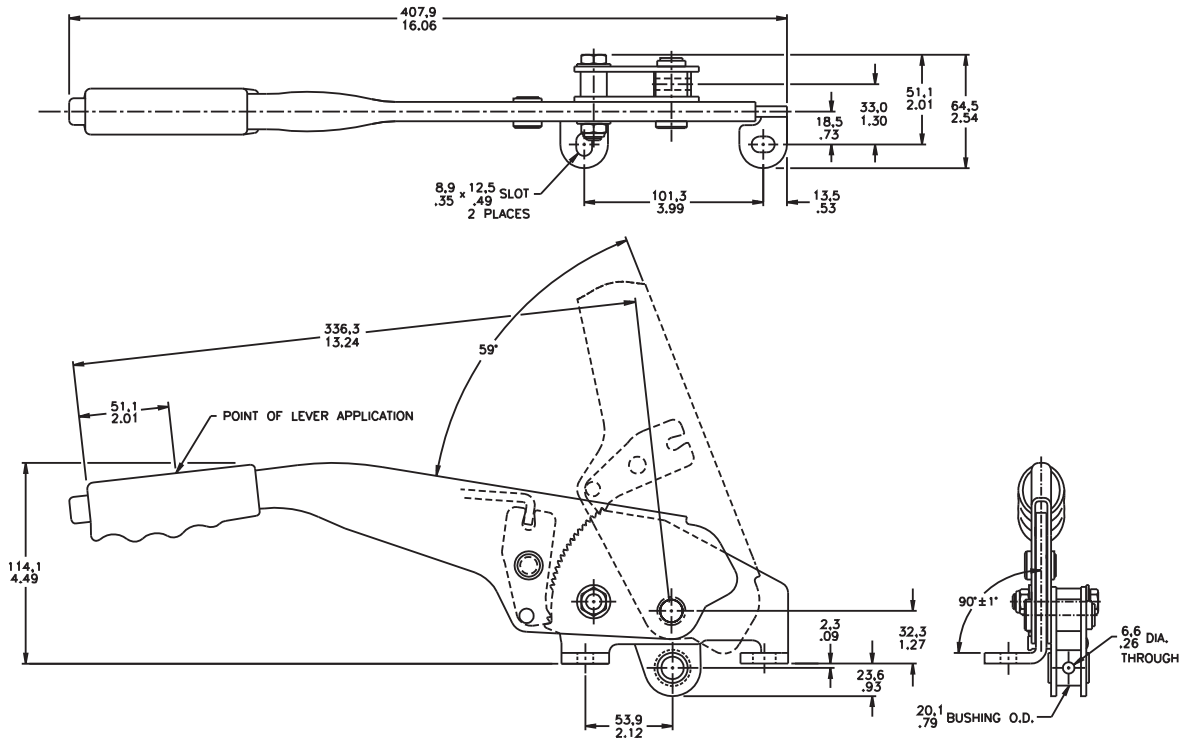

Model Number 32-140-020

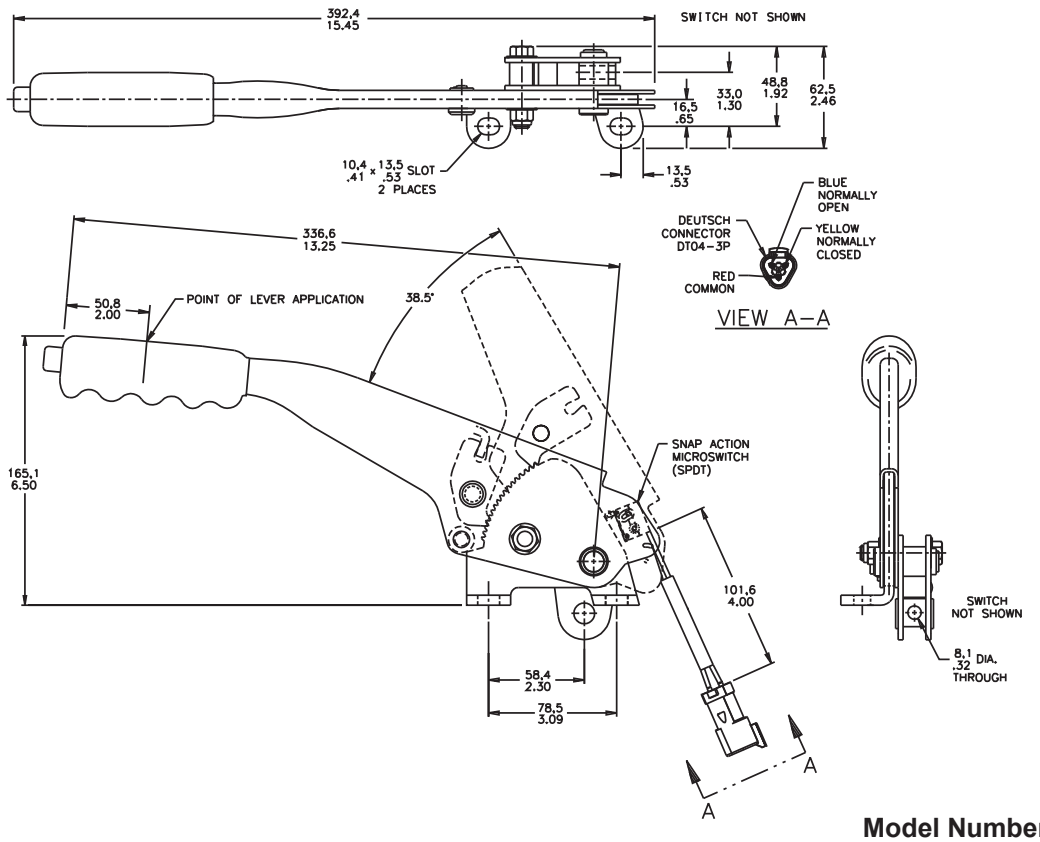

Model Number 32-140-021